GRS-IBS Showcase

Replacement of Bridge No. A-008 Potomac Hollow Road over Moores Run

WBCM
ARCHITECTURE ENGINEERING CONSTRUCTION

WBCM Bridge Engineers:
Mike Izzo, P.E.
Dipali Patel, P.E.

U.S. Department of Transportation
Federal Highway Administration

ALLEGANY COUNTY MARYLAND 1789

Existing Structure

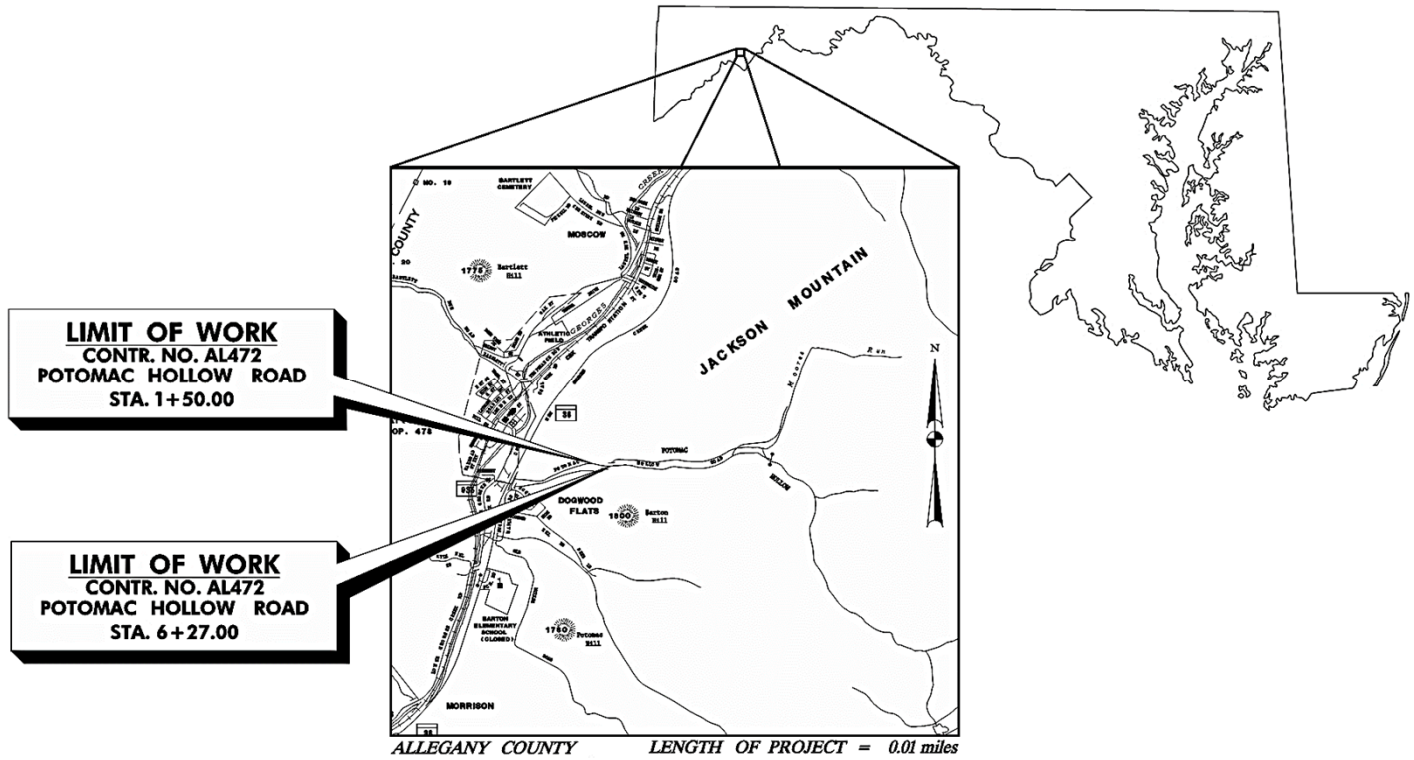

Existing Structure

- Existing bridge was a 23'-0" long and 18'-8" wide steel beam bridge over concrete abutments
- Load posted and possessed a Bridge Sufficiency Rating (BSR) of 40.4
- Allegany County obtained a grant from the Federal Highway Administration's "Innovative Bridge Research and Deployment Program" for the use of innovative design and construction techniques
- Grant required the use of Hybrid-Composite Beam (HCB) superstructure from HC Bridge Company, LLC and Geosynthetic Reinforced Soil (GRS) abutments

Proposed Structure

- Proposed bridge is a 30’-3 $^{5}/_{16}$” long and 25’-$^{1}/_{2}$” wide with Hybrid-Composite Beam (HCB) superstructure with Geosynthetic Reinforced Soil (GRS) abutments
- Two lane bridge with a 9’-0” wide lane and a 2’-0” wide shoulder in each direction.

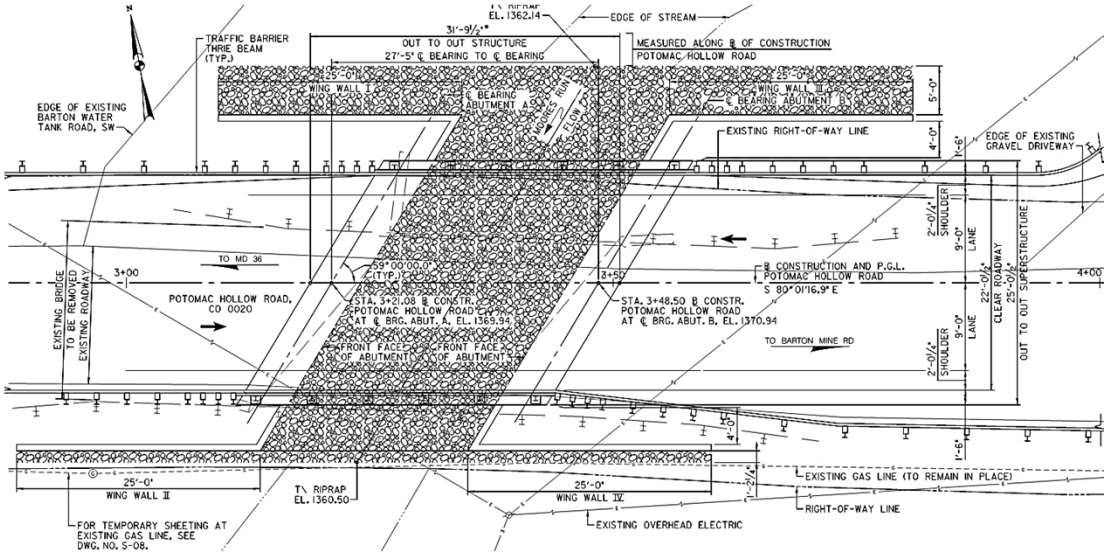

Alignment

- South face of the proposed bridge has been maintained at the same location as the existing bridge
- Permanent baseline has been shifted north to accommodate the additional width to avoid impacting an existing 6” gas transmission line near the south face of the existing bridge

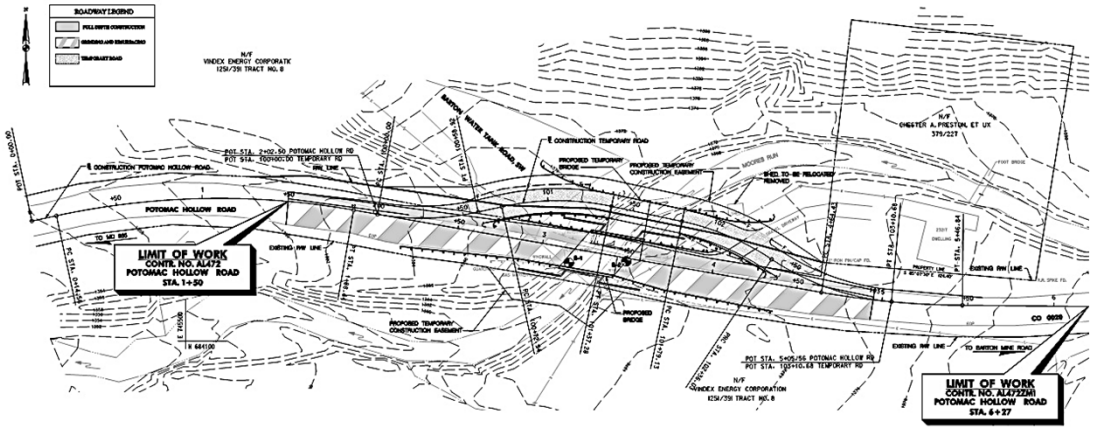

Maintenance of Traffic

- A one lane temporary detour bridge has been installed upstream of the existing bridge

Superstructure

- 8 $^{1}/_{2}$" thick reinforced concrete slab is supported by the Hybrid-Composite Beam (HCB) Superstructure, a Federal grant requirement
- The HCB Superstructure consists of six 3'-11 $^{3}/_{4}$" wide x 1'-6 $^{5}/_{16}$" deep simply supported Hybrid-Composite Beams (HCB)

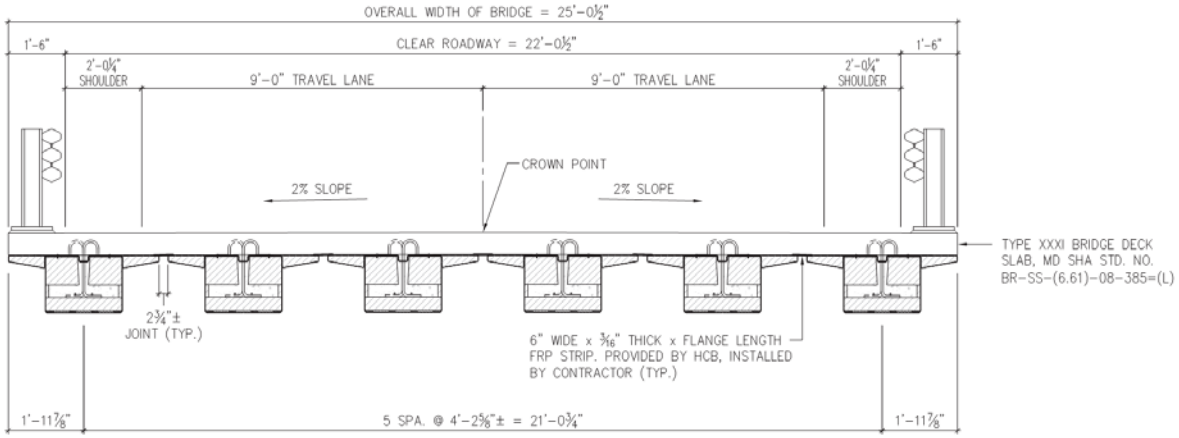

Hybrid-Composite Beams

- Hybrid-Composite Beams comprised of three main sub-components
  - ✓Shell: made of Fiber Reinforced Plastic (FRP)
  - ✓Compression Reinforcement: consists of Self Consolidating Concrete (SCC) concrete which is pumped on site into a profiled conduit within the beam shell
  - ✓Tension Reinforcement: consists of prestressing steel which runs along the bottom flange

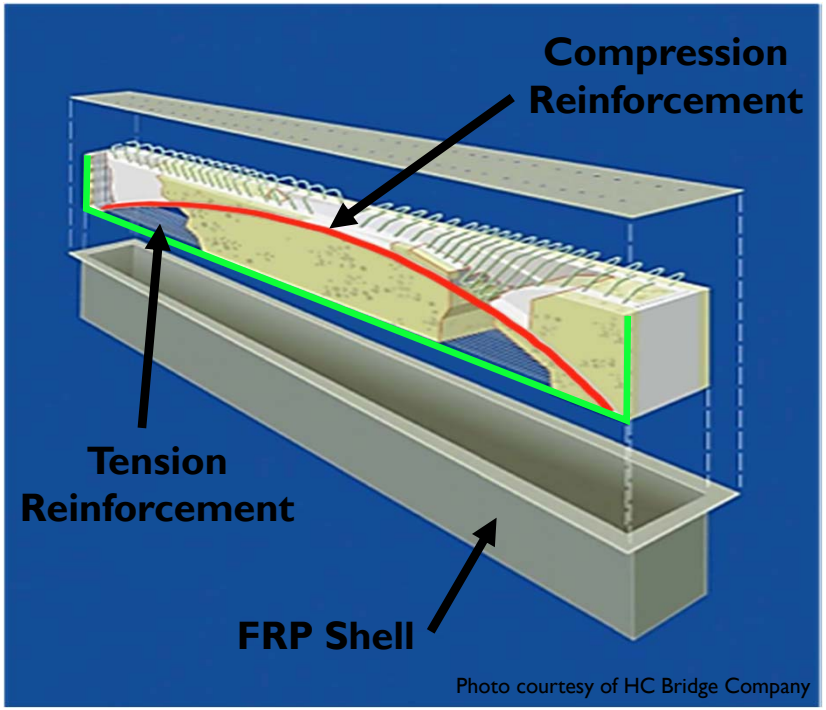

Photo courtesy of HC Bridge Company

Hybrid-Composite Beams

- HCB's work as a Tied Arch System
- Bending behavior is analogous to an optimized reinforced concrete beam whereby all unnecessary concrete has been removed

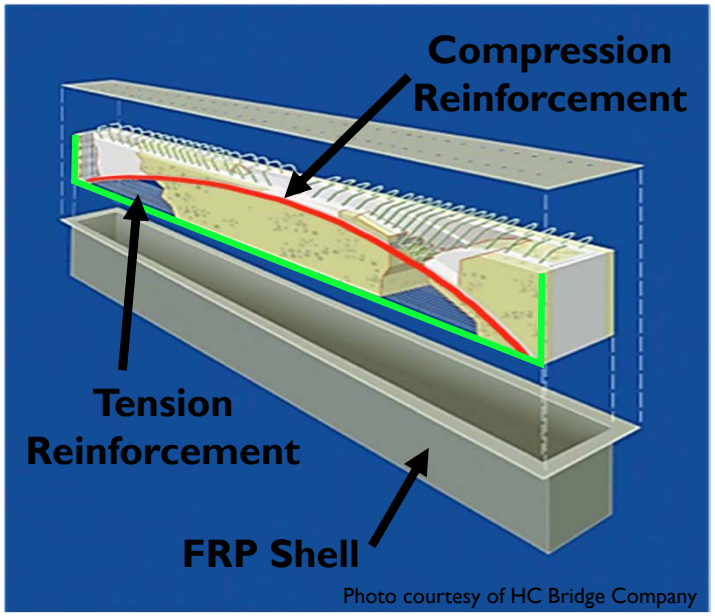

Photo courtesy of HC Bridge Company

Hybrid-Composite Beams

- Advantages
  - ✓sustainable with a 100+ year service life
  - ✓lightweight
  - ✓accelerated bridge construction
  - ✓optimization of every material utilized
  - ✓excellent corrosion resistance lending to better life cycle costs
  - ✓reduced carbon footprint

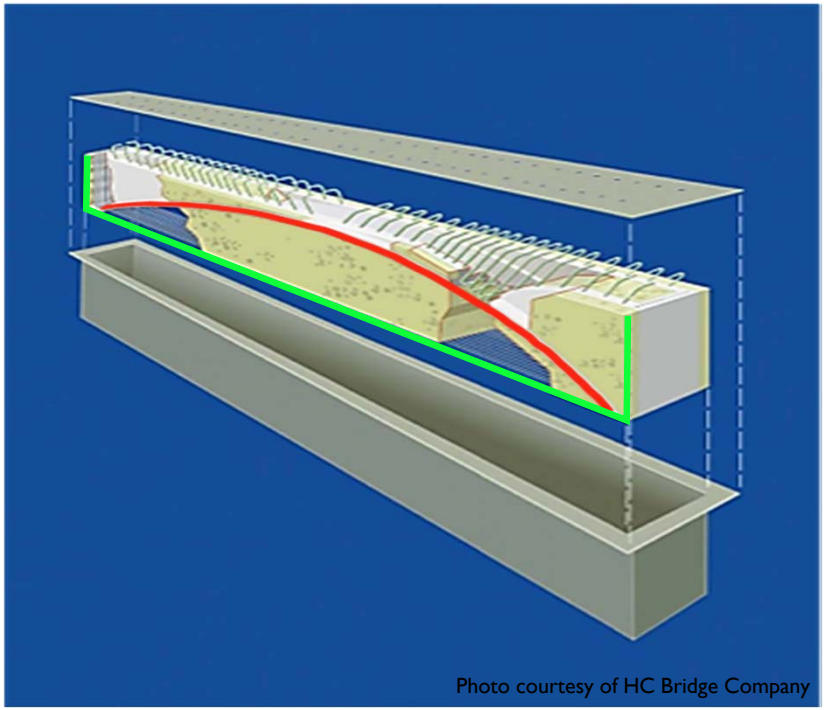

Photo courtesy of HC Bridge Company

Substructure

- Per the Federal grant requirements, a Geosynthetic Reinforced Soil-Integrated Bridge System (GRS-IBS) was used
- GRS-IBS is an established technology used at several bridges in various states

Design Aids

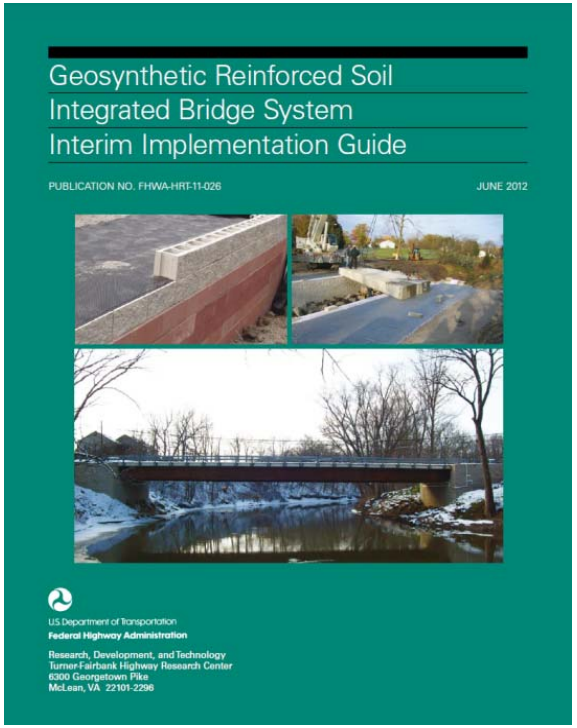
Geosynthetic Reinforced Soil
Integrated Bridge System
Interim Implementation Guide
PUBLICATION NO. FHWA-HRT-11-026
JUNE 2012
US Department of Transportation
Federal Highway Administration
Research, Development, and Technology
Turner-Fairbank Highway Research Center
6300 Georgetown Pike
McLean, VA 22101-2296

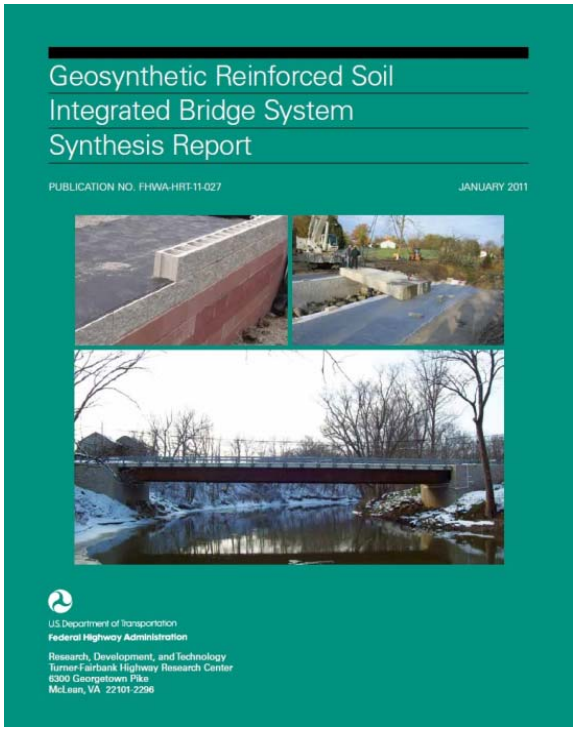
Geosynthetic Reinforced Soil
Integrated Bridge System
Synthesis Report
PUBLICATION NO. FHWA-HRT-11-027
JANUARY 2011
US Department of Transportation
Federal Highway Administration
Research, Development, and Technology
Turner-Fairbank Highway Research Center
6300 Georgetown Pike
McLean, VA 22101-2296

Design Process

- Determine the layout of GRS-IBS with respect to the superstructure
- Account for setback and clear space
- Determine the height of the abutment
- Calculate Loads
- Conduct External Stability Analysis
- Conduct Internal Stability Analysis

Design Process

Determine the layout of GRS-IBS with respect to the superstructure

Account for setback and clear space

Determine the height of the abutment

Calculate Loads

Conduct External Stability Analysis

Conduct Internal Stability Analysis

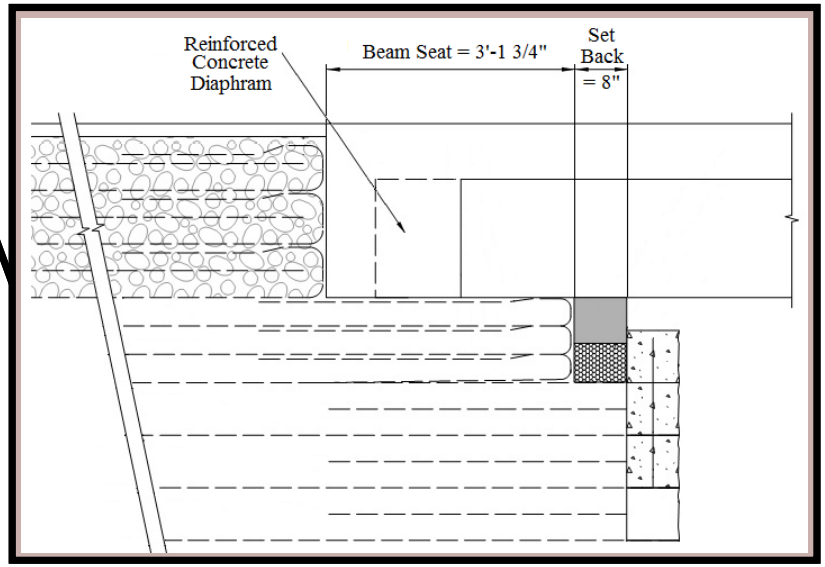

Design Process

Determine the layout of GRS-IBS with respect to the superstructure

Account for setback and clear space

Determine the height of the abutment

- Max height of abutment = 12'-3"

Calculate Loads

Conduct External Stability Analysis

Conduct Internal Stability Analysis

Design Process

Determine the layout of GRS-IBS with respect to the superstructure

Account for setback and clear space

Determine the height of the abutment

Calculate Loads

- Bridge Dead Loads (calculated per SF)
- Bridge Live Loads (calculated per SF)
- Road Base Dead Loads (calculated per SF)
- Weight of GRS Abutments
- Weight of Facing Blocks
- Lateral Load (retained backfill)

Conduct External Stability Analysis

Conduct Internal Stability Analysis

Design Process

Determine the layout of GRS-IBS with respect to the superstructure

Account for setback and clear space

Determine the height of the abutment

Calculate Loads

Conduct External Stability Analysis

Conduct Internal Stability Analysis

- Direct Sliding – Factor of Safety against Sliding > 1.5
- Bearing Capacity – Factor of Safety against Bearing Capacity > 2.5
- Global Stability – Schnabel Engineering, LLC

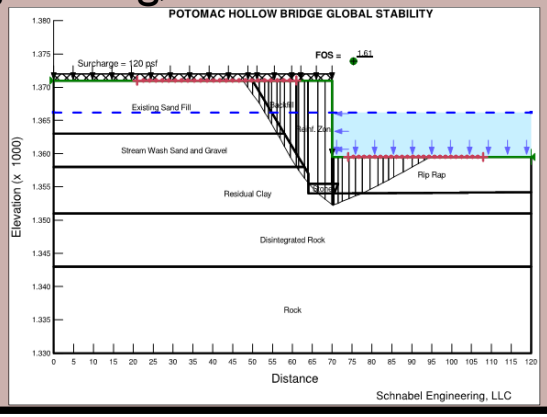

Existing Bridge | Proposed Bridge | GRS-IBS | Hydraulics | Construction Considerations

Design Process

Determine the layout of GRS-IBS with respect to the superstructure

Account for setback and clear space

Determine the height of the abutment

Calculate Loads

Conduct External Stability Analysis

Conduct Internal Stability Analysis

- Ultimate Capacity – Bearing Area
- Deformations
- Calculate Required Reinforcement Strength

Materials

- Backfill and Reinforced Soils: No. 7 Aggregate 901 from Allegany Aggregates, Inc.
  - ✓Mike Adams from FHWA will be performing a direct shear test
- Facing Elements: 8" high ASTM C-90 Solid and Hollow Concrete Masonry
  - ✓solid blocks stained red or brown depending on location, hollow blocks stained brown, and blocks placed in areas subject to scour stained red
- Geotextile: TerraTex HPG-57s, biaxial woven polypropylene (PP) geotextile
  - ✓ultimate strength of 4,800 lb/ft in accordance with ASTM D4595
  - ✓$T_{@\varepsilon=2\%}$ = 1320 lb/ft and $T_{required}$ = 720 lb/ft

Sequence of Construction

- Following excavation, a Reinforced Soil Foundation (RSF) is installed consisting of abutment backfill material completely encapsulated with geotextile reinforcement
- Subsequently, wall CMU facing block and alternating layers of structural fill and geotextile are placed and compacted to build the abutments to the beam seats

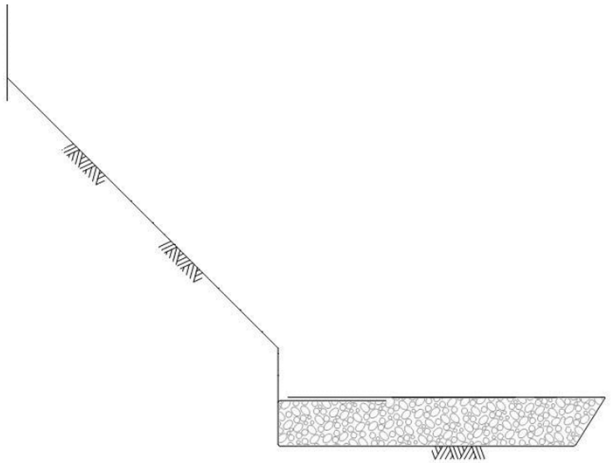

Sequence of Construction

- Additional geotextile reinforcement is placed in the layers of backfill under where the beams are to be placed
- Hollow cores of top three courses of CMU facing block are filled with concrete and pinned together with No. 4 rebar

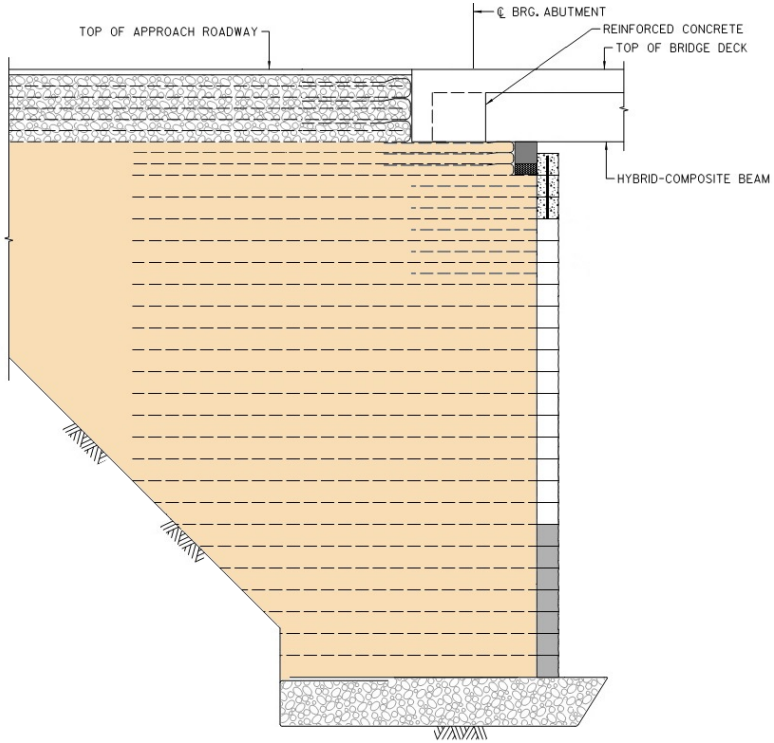

Sequence of Construction

- Bearing bed reinforcement spacing directly under the beam seat is 4”, half the primary spacing
- 4” thick foam board and 4” thick solid block are placed at the front of the beam seat to prevent damage to the top of the CMU facing wall from deflection and rotation of the beams
- Beams are places directly on the top layer of geotextile covering the compacted backfill

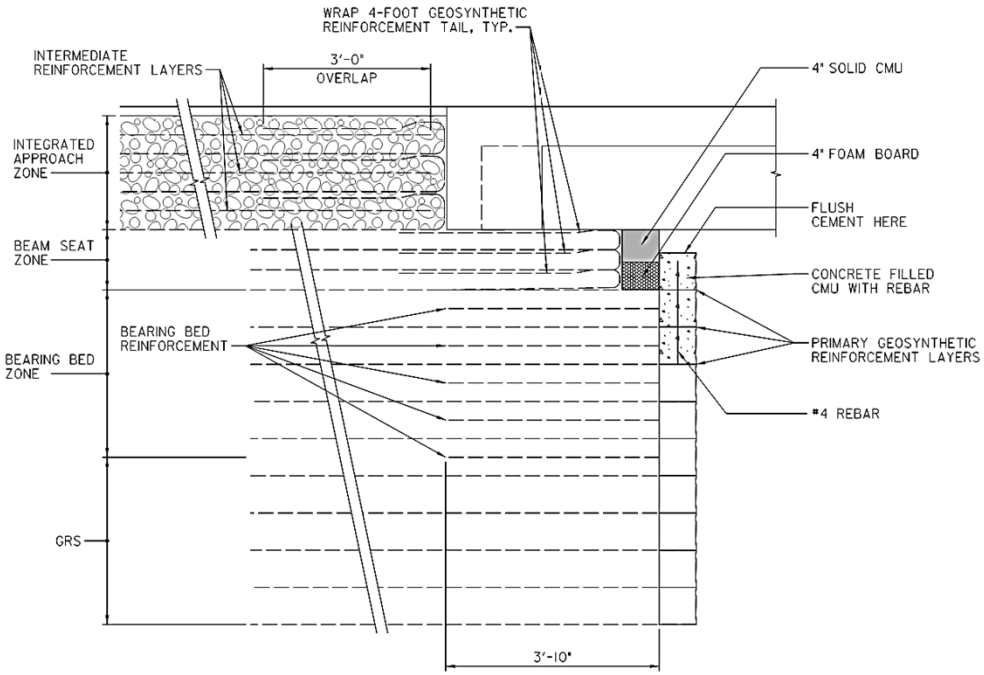

Hydraulic Analysis

- HEC-RAS hydraulic output indicated that the 10-year, 100-year, and 500-year storms will overtop the bridge in both existing and proposed conditions
- SHA Chapter 11 Guidance Document states that the lesser of the overtopping and 100-year storms be evaluated
- 10-year storm barely overtops the bridge and was thus evaluated for scour depth

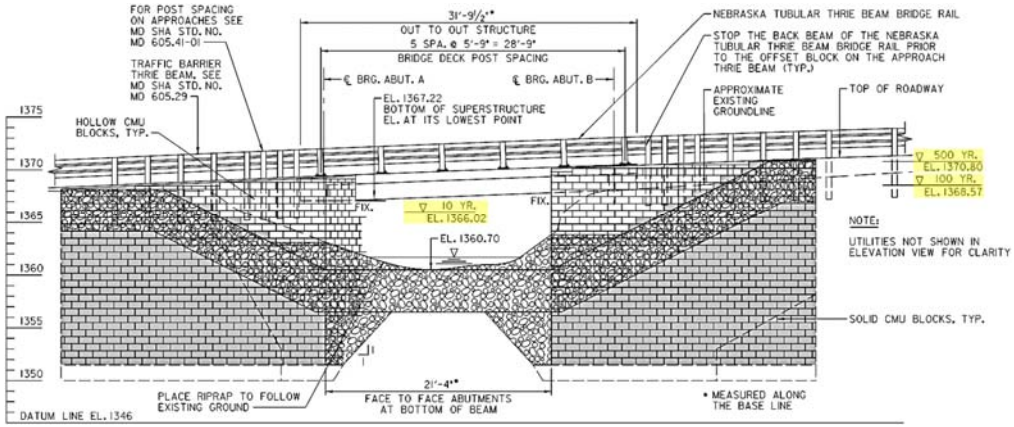

Scour Countermeasures

- Based on meetings with Allegany County, Class III riprap will be used instead of the Class II riprap recommended by the scour countermeasure sizing algorithm
- A 46” thick bed of Class III riprap underlain by geotextile fabric will be placed across the complete stream channel, wrap the length of all four wing walls, and extend upstream and downstream from the abutments

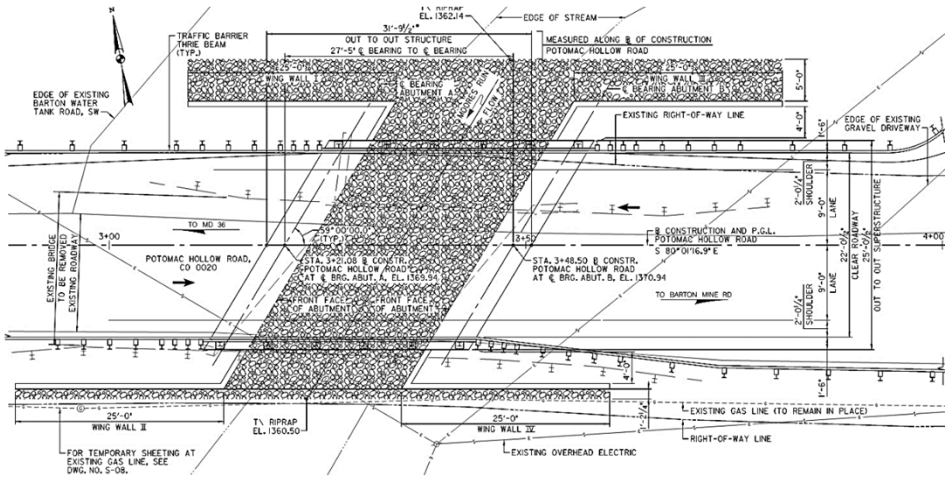

Overtop Countermeasures

- Because of the possibility of overtopping, open railing was used instead of concrete parapets
- Nebraska Railing was selected for this project
  - ✓listed as a crash tested barrier on the FHWA website
  - ✓constructed of material that is readily available making it an affordable option

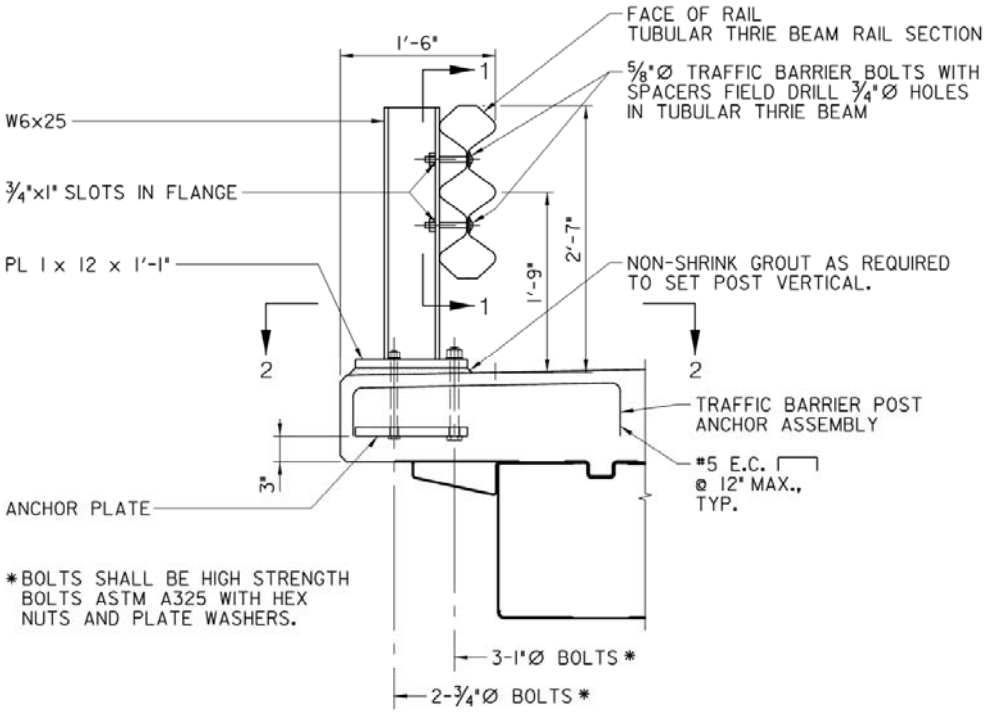

Stream Diversion

- Excavations for both abutments will be below normal stream elevations
- Sand Bag or Barrier Dikes will be used to protect excavations from water intrusion
- Provisions will be made to pump water away from excavations and silt bags or other County approved sediment control methods

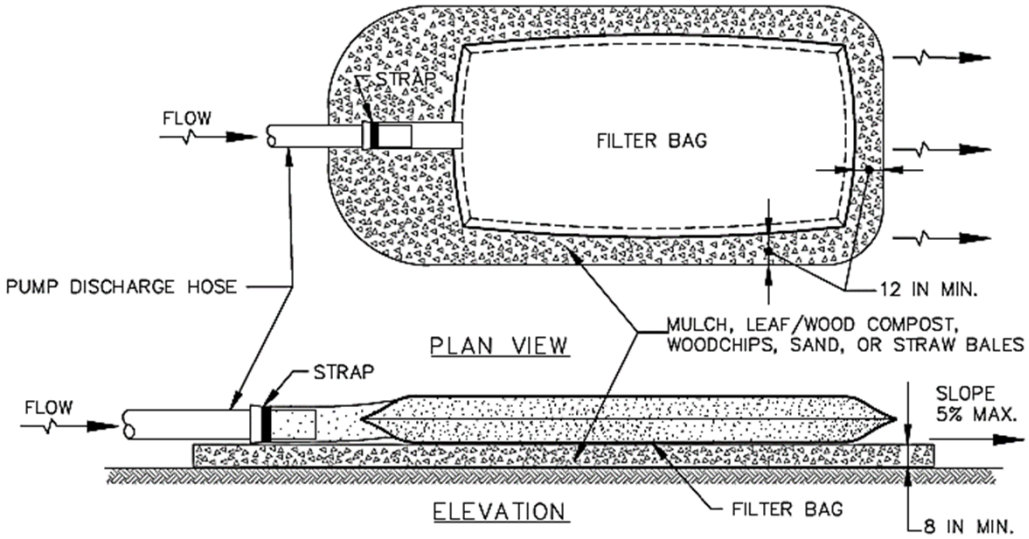

Utilities

- Existing 6 inch gas transmission line is located on the south (downstream) side of the bridge
- The Contractor will protect the gas utilities during excavation activities and the placement of riprap

Right-of-Way & Easements

- A temporary construction easement was necessary to construct the temporary detour bridge
- Approximately 0.15 acre easement was acquired from Vindex Energy Corporation and is located on the north (upstream) side of the existing bridge and roadway
- Some small permanent takes were also required from Vindex Energy Corporation
- Area of Potential Effect (APE) for the project consists of a 30' wide corridor on the north (upstream) side of the existing bridge and running approximately 150' both east and west of the existing bridge
- APE is required to construct the temporary road approaches on both the east and west end and possible stormwater management facilities

Permitting

- Army Corps of Engineers/Maryland Department of the Environment (MDE) Joint Permit
- Roadside Tree Permit
- Allegany County Erosion & Sediment Control and Stormwater Management Permit
- Categorical Exclusion from State/ FHWA

Thank You

Questions?